AR (ABRASION RESISTANT)

Recommended hose, especially as last piece closest to the nozzle. Ideally suited for dry material handling of abrasive products such as a grain, iron ore, crushed rock, sand, cement, powders and gravel. Static dissipating rubber with PVC helix construction. Corrugated cover, smoother interior.
Temp Range: -30° to 140° F

Sold in standard lengths only.

Inside Diameter	Approx. Outside Diameter	Vacuum Rating @ 72° F	Min Bend Radius @ 72° F	Weight per Foot	Standard Length	Part No.
1 1/2″	1.82″	29.8″	2″	0.37#	50′ or 100′	10-0449
2″	2.35″	29.8″	2.5″	0.50#	50′ or 100′	10-0540
2 1/2″	2.95″	29.8″	2.5″	0.88#	50′ or 100′	10-0451
3″	3.50″	29.8″	3″	1.10#	50′ or 100′	10-0458
3 1/2″	4.11″	29.8″	4″	1.35#	50′ or 100′	10-0452
4″	4.63″	29.8″	4.5″	1.77#	25′ or 50′	10-0196
5″	5.76″	28″	5″	2.47#	25′ or 50′	10-0453
6″	6.73″	28″	9.2″	3.08#	25′ or 50′	10-0454

LW (LIGHT WEIGHT) RUBBER

Better abrasion resistance than plastic hose. Reinforced with single tempered spring steel flat wire. Soft cuffs on each end. Static electricity conductivity exceeds the MIL spec. of .5 megaohms/ft. Resists weather and abrasion.
Temp Range: -20° to 175° F

Sold in standard lengths only (due to cuffs), most lengths are made to order and typically have a 4 to 6 week lead time.

Inside Diameter	Approx. Outside Diameter	Vacuum Rating @ 72° F	Min Bend Radius @ 72° F	Weight per Foot	Standard Length	Part No.
1 1/2″	1.95″	Full	3″	.7#	20′/25′/50′	10-0472-X
2″	2.44″	Full	3.5″	.9#	20′/25′/50′	10-0034-X
2 1/2″	3.03″	Full	4.5″	1.1#	20′/25′/50′	10-0035-X
3″	3.50″	Full	5.5″	1.3#	20′/25′/50′	10-0006-X
3 1/2″	4.00″	Full	6.5″	1.8#	20′/25′/50′	10-0007-X
4″	4.50″	Full	7.5″	2.0#	20′/25′/50′	10-0008-X
5″	5.56″	Full	9.5″	2.7#	20′/25′/50′	10-0176-X
6″	6.50″	22″	12″	3.3#	20′/25′/50′	10-0151-X

-X = Length

HD (HEAVY DUTY) RUBBER

Better abrasion resistance, but less flexibility, than light weight rubber hose. Double wire reinforced. 4″ long soft cuffs.
Temp Range: -20° to 175° F

Sold in standard lengths only (due to cuffs), most lengths are made to order and typically have a 4 to 6 week lead time.

Inside Diameter	Approx. Outside Diameter	Vacuum Rating @ 72° F	Min Bend Radius @ 72° F	Weight per Foot	Standard Length	Part No.
2″	2.62″	Full	2.5″	.7#	20′/25′/50′	10-0087-X
2 1/2″	3.12″	Full	3.5″	.9#	20′/25′/50′	10-0088-X
3″	3.62″	Full	5″	1.1#	20′/25′/50′	10-0089-X
3 1/2″	4.10″	Full	6.5″	1.3#	20′/25′/50′	10-0090-X
4″	4.60″	Full	8″	1.8#	20′/25′/50′	10-0086-X
5″	5.70″	Full	11″	2.0#	20′/25′/50′	10-0474-X
6″	6.80″	Full	14″	2.7#	20′/25′/50′	10-0084-X
8″	8.80″	Full	18″	3.3#	20′/25′/50′	10-0085-X

-X = Length

117 Industry Road, Marietta, Ohio 45750, USA
US: 800.752.2400 | INT'L: +1.740.374.2306 | sales@hi-vac.com
www.hi-vacproducts.com | Hi-Vac Corporation | Hi-Vac Industrial Vacuum Systems

® Hi-Vac Corporation. All Rights Reserved 09/2026 04439

STATIC CONDUCTING PVC

Confirmation that the material is flowing. It features an embedded copper static Clear, flexible, and abrasion resistant, this PVC hose provides visual-wire for positive grounding. A rigid PVC spiral provides strength against collapse. Smooth bore eliminates material build-up inside
Temp Range: -4° to 150° F

Sold in standard lengths only.

Inside Diameter	Approx. Outside Diameter	Vacuum Rating @ 72° F	Min Bend Radius @ 72° F	Weight per Foot	Standard Length	Part No.
1 1/2″	1.93″	28″	3″	0.43#	50′ or 100′	U4711-0002
2″	2.48″	28″	4″	0.58#	50′ or 100′	U4710-0006
2 1/2″	2.80″	28″	4.5″	0.89#	50′ or 100′	U4701-0007
3″	3.65″	28″	6″	1.25#	50′ or 100′	U4702-0010
3 1/2″	4.27″	28″	8″	1.55#	50′ or 100′	10-0650
4″	4.72″	24″	10″	1.93#	25′ or 50′	U4703-0017
5″	5.74″	24″	16″	2.40#	25′ or 50′	U4703-0033
6″	6.81″	24″	18″	3.70#	20′	U4705-0025

HIGH TEMPERATURE HOSE

This multi-ply hose is specially formulated with high temperature compounds to withstand 230°F continuous (300° intermittent). Ideal for fly ash and other high temperature applications. Other features include static conductivity, ozone and abrasion resistance, wire and fabric reinforcement. The 2″ through 6″ hoses are reinforced with a flat wire spiral. The 8″ hose is reinforced with a round spring
Temp Range: 250° F continuous

Sold in standard lengths only (due to cuffs), most lengths are made to order and typically have a 4 to 6 week lead time.

Inside Diameter	Approx. Outside Diameter	Vacuum Rating @ 72° F	Min Bend Radius @ 72° F	Weight per Foot	Standard Length	Part No.
1 1/2″	2.00″	29.92″	3″	.82#	50′	U4701-0015
2″	2.49″	29.92″	3.5″	1.05#	20′	U4710-0017
					25′	TBA
					50′	10-0619
2 1/2″	2.99″	29.92″	4″	1.30#	20′	U4701-0010
					25′	U4701-0014
					50′	U4701-0011
3″	3.49″	29.92″	4.5″	1.52#	20′	U4702-0008
					25′	U4702-0023
					50′	U4702-0022
3 1/2″	3.99″	29.92″	5″	1.64#	20′	10-0604
					25′	10-0625
					50′	10-0640
4″	4.49″	29.92″	7.5″	2.00#	20′	U4703-0015
					25′	U4705-0028
					50′	U4701-0013
5″	5.50″	26″	9.5″	2.42#	25′	U4702-0021
					50′	U4702-0024
6″	6.49″	17″	12″	3.50#	10′	U4705-0022
					20′	U4705-0023
					25′	U4705-0027
					50′	U4705-0029

117 Industry Road, Marietta, Ohio 45750, USA
US: 800.752.2400 | INT'L: +1.740.374.2306 | sales@hi-vac.com
www.hi-vacproducts.com | Hi-Vac Corporation | Hi-Vac Industrial Vacuum Systems

® Hi-Vac Corporation. All Rights Reserved 09/2026 04439

UNIONS AND REDUCERS

HOSE UNIONS

Size			Part Number
2″	to	2″	U7000-0005
2 1/2″	to	2 1/2″	U7000-0003
3″	to	3″	U7000-0244
3 1/2″	to	3 1/2″	U7000-0113
4″	to	4″	U7000-0002
5″	to	5″	U7000-0245
6″	to	6″	U7000-0001

HOSE REDUCERS

Size			Part Number
2″	to	1 1/2″	02-3126
2 1/2″	to	2″	02-2661
3″	to	2″	02-2660
3″	to	2 1/2″	02-2025
3 1/2″	to	2 1/2″	02-2339
3 1/2″	to	3″	02-2024
4″	to	3″	02-2023
4″	to	3 1/2″	02-2022
5″	to	4″	02-2021
6″	to	4″	02-2020
6″	to	5″	02-2019

HOSE SLEEVE WYES

Hose sleeve wyes are made out of 11ga or 16ga tubing and can be made with a 15°, 30° or 45° spread angle. The branches can have a smaller diameter than the trunk for step down applications. See the last page of this catalog for more information.

® Hi-Vac Corporation. All Rights Reserved 09/2026 04439

117 Industry Road, Marietta, Ohio 45750, USA
US: 800.752.2400 | INT'L: +1.740.374.2306 | sales@hi-vac.com
www.hi-vacproducts.com | Hi-Vac Corporation | Hi-Vac Industrial Vacuum Systems

HOSE CLAMPS

Nominal Hose I.D.	FOR "CORRUGATED" O.D. HOSE		FOR HOSES WITH SMOOTH CUFFS	
	SPIRAL BOLT CLAMPS			
	CW SPIRAL	CCW SPIRAL	WORM GEAR CLAMPS	T-BOLT CLAMP
	Fits our AR Hose	Fits our Static Conducting PVC Hose		
2″	08-0512	U4804-0049	U7000-0012 (2″ - 3″ ID)	--
2.5″	U4804-0026	TBA		--
3″	U4804-0027	08-0511	A220625 (3.063″ - 4″ ID)	--
3.5″	08-0538	U4804-0046	10-0046 (3.125″ - 5″ ID)	08-0510 (4″ - 4.31″ ID)
4″	10-0582	U4804-0024		U4607-0216 (4.24″ - 4.56″ ID)
5″	A382107	TBA	A220680 (5″ to 7″ ID)	08-0493 (5.25″ - 5.56″ ID) 08-0492 (5.5″ - 5.81″ ID)
6″	10-0580	U4804-0023		08-0519 (6″ - 6.31″ ID) 10-0575 (6.25″ - 6.56″ ID)

NOTE: Vacuum hoses typically do not need to be clamped unless the hose is being pulled or suspended.

® Hi-Vac Corporation. All Rights Reserved 09/2026 04439

117 Industry Road, Marietta, Ohio 45750, USA
US: 800.752.2400 | INT'L: +1.740.374.2306 | sales@hi-vac.com
www.hi-vacproducts.com | Hi-Vac Corporation | Hi-Vac Industrial Vacuum Systems

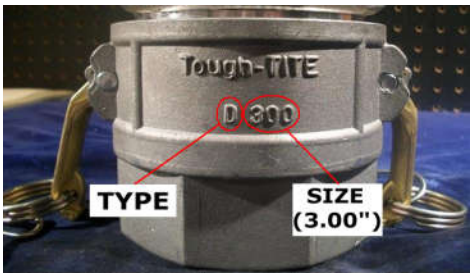

CAMLOCK STYLE QUICK COUPLERS

	TYPE A	TYPE D	TYPE E*	TYPE C*	TYPE DP	TYPE DC	REPL. GASKET	
SIZE	Male X Female NPT	Female X Female NTP	Male X Hose Shank	Female X Hose Shank	Male Dust Plug	Female Dust Cap	Buna-N	PTFE (High Temp)
1 1/2″	10-0546	10-0545	TBA	TBA	10-0515	TBA	TBA	TBA
2″	10-0201	10-0209	U7000-0262	U7000-0262	10-0223	10-0216	10-0487	10-0500
2 1/2″	10-0202	10-0210	U7000-0192	U7000-0195	10-0224	10-0217	10-0488	TBA
3″	10-0203	10-0211	U7000-0190	U7000-0247	10-0225	10-0218	10-0489	10-0501
4″	10-0204	10-0212	U7000-0193	U7000-0196	10-0226	10-0219	10-0490	TBA
5″	10-0205	10-0213	U7000-0225	U7000-0189	10-0227	10-0220	10-0491	TBA
6″	10-0206	10-0214	U7000-0214	U7000-0197	10-0228	10-0221	10-0492	TBA

NOTE: Not recommended for vacuuming - see next page.

117 Industry Road, Marietta, Ohio 45750, USA
US: 800.752.2400 | INT'L: +1.740.374.2306 | sales@hi-vac.com
www.hi-vacproducts.com | Hi-Vac Corporation | Hi-Vac Industrial Vacuum Systems

® Hi-Vac Corporation. All Rights Reserved 09/2026 04439

CAMLOCK STYLE QUICK COUPLERS

HOSE	1½″ MNPT	2″ MNPT	2½″ MNPT	3″ MNPT	4″ MNPT	5″ MNPT	6″ MNPT
1½″	02-1568	02-0990	02-0992	02-0995 *	n/a	n/a	n/a
2″	n/a	02-0991 Rev A	02-0993	02-0996	02-1000 *	n/a	n/a
2½″	n/a	n/a	02-0994 02-0994-P +	02-0997	02-1001 *	n/a	n/a
3″	n/a	n/a	n/a	02-0998 Rev B 02-0998-P +	02-1002	02-1008 *	n/a
3½″	n/a	n/a	n/a	n/a	02-1003	02-1009	02-1016 *
4″	n/a	n/a	n/a	n/a	02-1004 rev A 02-1004-P +	02-1010	02-1017 *
5″	n/a	n/a	n/a	n/a	n/a	02-1011 02-1011-P +	02-1018
6″	n/a	n/a	n/a	n/a	n/a	n/a	02-1019 02-1019-P +

** Please discuss conveying performance with your Hi-Vac representative before ordering this adapter.*

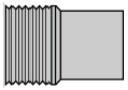

+ Economy version of this adapter. These are sourced and are shorter in length.

USING HOSE SHANK CAMLOCK COUPLERS TO CONNECT HOSE COUPLERS

Although hose shank style camlock couplers are available from Hi-Vac Corporation, we recommend using threaded camlock couplers along with the above steel hose shank adapters to allow maximum air flow. The thickness of the casted shank of the former creates a restriction at the coupling, reducing vacuuming performance.

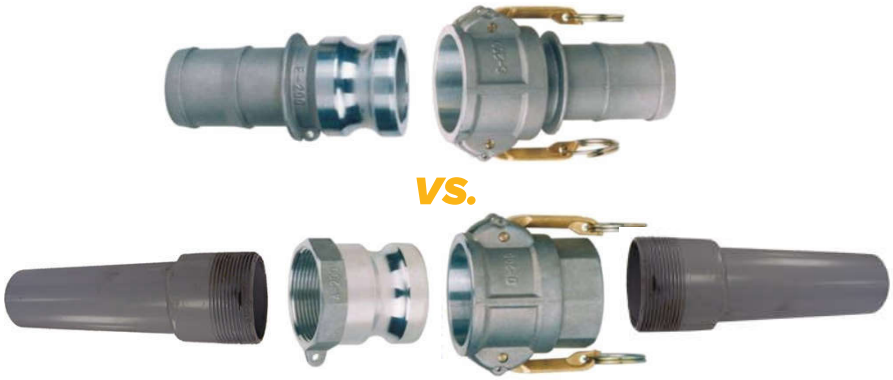

117 Industry Road, Marietta, Ohio 45750, USA
US: 800.752.2400 | INT'L: +1.740.374.2306 | sales@hi-vac.com
www.hi-vacproducts.com | Hi-Vac Corporation | Hi-Vac Industrial Vacuum Systems

® Hi-Vac Corporation. All Rights Reserved 09/2026 04439

EXAMPLE: 75 HP WITH 5" INLET AND 200' HOUSE RUN

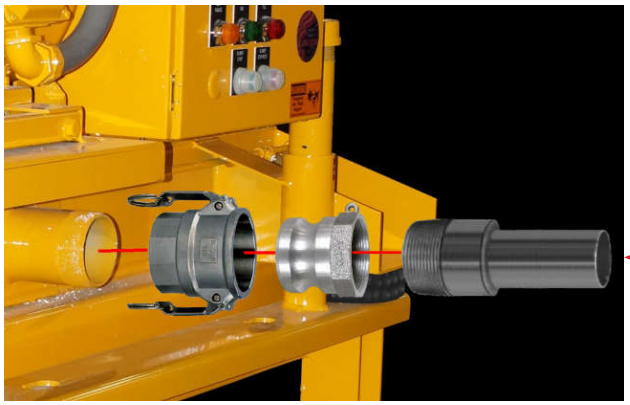

10-0213	5″ Female Camlock
10-0205	5″ Male Camlock
02-1011	5″ MNPT X 5″ Hose Adapter

10-0453	5″ AR Hose (125′)
02-1011	5″ MNPT X 5″ Hose Adapter
10-0213	5″ Female Camlock
10-0205	5″ Male Camlock
02-1010	5″ MNPT X 4″ Hose Adapter

10-0196	4″ AR Hose (100′)
02-1004	4″ MNPT X 4″ Hose Adapter
10-0212	4″ Female Camlock
10-0204	4″ Male Camlock
02-1003	4″ MNPT X 3.5″ Hose Adapter

10-0453	5″ AR Hose (125′)

® Hi-Vac Corporation. All Rights Reserved 09/2026 04439

117 Industry Road, Marietta, Ohio 45750, USA
US: 800.752.2400 | INT'L: +1.740.374.2306 | sales@hi-vac.com
www.hi-vacproducts.com | Hi-Vac Corporation | Hi-Vac Industrial Vacuum Systems

ROUND LANCE NOZZLES

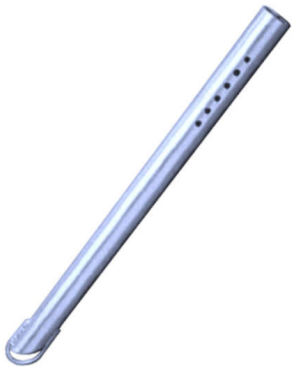
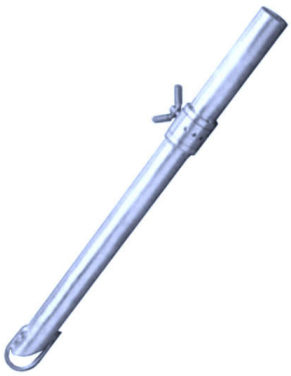

SIZE	48″ L BASIC MODEL	48″ L STANDARD MODEL	54″ L DELUXE MODEL
2″	11-0089A-PB	11-0089A-PS	11-0089A-PD
2.5″	11-0091A-PB	11-0091A-PS	11-0091A-PD
3″	11-0093A-PB	11-0093A-PS	11-0093A-PD
4″	11-0096A-PB	11-0096A-PS	11-0096A-PD

MODEL COMPARISON	BASIC	STANDARD	DELUXE
Aluminum Construction	✓	✓	✓
Stand-Off Loop	✓	✓	✓
Six Air Register Holes	✓	✕	✕
Adjustable Air Register Ring	✕	✓	✓
Operator Handle	✕	✕	✓
Male Camlock Coupler	✕	✕	✓

® Hi-Vac Corporation. All Rights Reserved 09/2026 04439

117 Industry Road, Marietta, Ohio 45750, USA
US: 800.752.2400 | INT'L: +1.740.374.2306 | sales@hi-vac.com
www.hi-vacproducts.com | Hi-Vac Corporation | Hi-Vac Industrial Vacuum Systems

ALL ALUMINUM CONSTRUCTION FEMALE FLIP-LEVER CAMLOCK

DUCK BILL FLARED NOZZLE

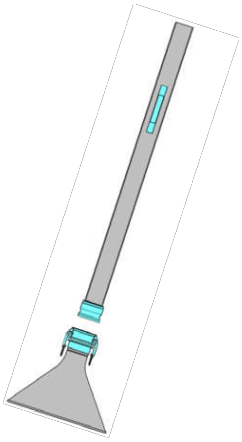

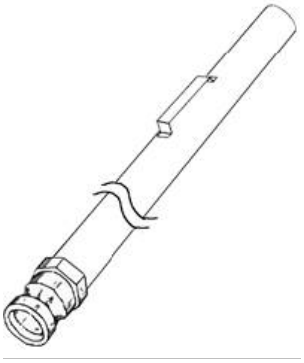

SIZE	ASSEMBLY PIN	NOZZLE ONLY PIN	WAND ONLY PIN
2″	11-0107A-DB	11-0200 (6.8 lbs.)	11-0202
3″	11-0111A-DB	11-0300 (6.8 lbs.)	11-0302
4″	11-0114A-DB	11-0400 (7.87 lbs.)	11-0402

® Hi-Vac Corporation. All Rights Reserved 09/2026 04439

117 Industry Road, Marietta, Ohio 45750, USA
US: 800.752.2400 | INT'L: +1.740.374.2306 | sales@hi-vac.com
www.hi-vacproducts.com | Hi-Vac Corporation | Hi-Vac Industrial Vacuum Systems

FLARED NOZZLE

Serrated front edge for breaking up caked materials. 14″ wide head. 48″ overall length. All aluminum construction. We only offer these in the following hard to find sizes.

Outlet Size	Part Number
2-1/2″ OD Plain	11-0109AP
3-1/2″ OD Plain	11-0113AP

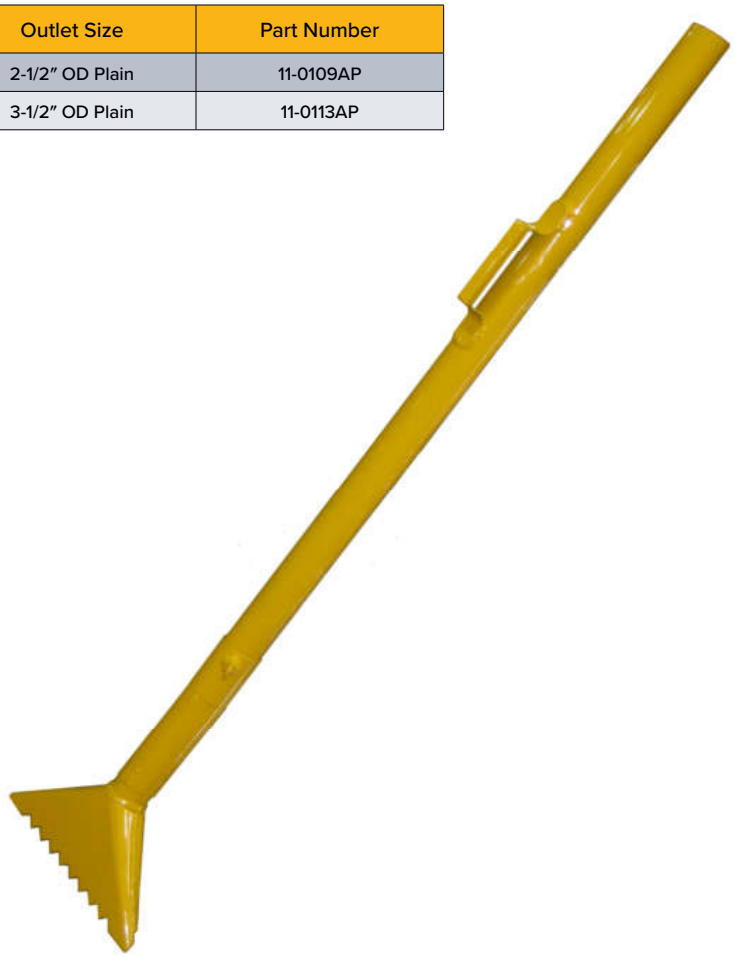

® Hi-Vac Corporation. All Rights Reserved 09/2026 04439

117 Industry Road, Marietta, Ohio 45750, USA
US: 800.752.2400 | INT'L: +1.740.374.2306 | sales@hi-vac.com
www.hi-vacproducts.com | Hi-Vac Corporation | Hi-Vac Industrial Vacuum Systems

LARGE NOZZLES

(Female Camlock Pictured)

BULK NOZZLE	
72″ long w/fixed aluminum handle. Inlet cut at a 45° angle.	
w/4″ Male Camlock	11-3014
w/4″ Female Camlock	11-3015
w/6″ Male Camlock	11-3016
w/6″ Female Camlock	11-3017

FLARED DEBRIS NOZZLE	
(WITH WHEELS) 15″ W x 1 1/4″ H Inside Opening	
w/4″ Hose Shank	11-3004
w/6″ Hose Shank	11-3006

117 Industry Road, Marietta, Ohio 45750, USA
US: 800.752.2400 | INT'L: +1.740.374.2306 | sales@hi-vac.com
www.hi-vacproducts.com | Hi-Vac Corporation | Hi-Vac Industrial Vacuum Systems

® Hi-Vac Corporation. All Rights Reserved 09/2026 04439

LONG CREVICE NOZZLES

For cleaning corners, narrow spaces, underneath racking and other confined spaces.

1 1/2″ ID x 24″ STEEL
11-0097

2″ ID x 40″ STEEL
11-0097

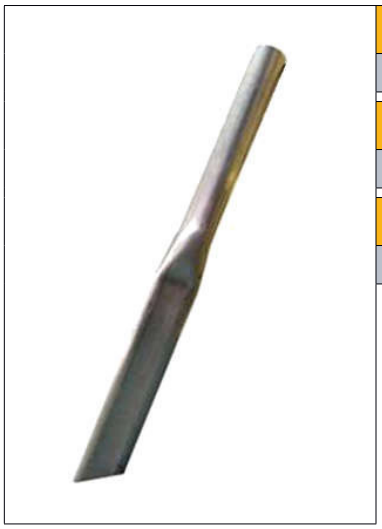

2 1/2″ ID x 42″ ALUMINUM
11-0100
3″ ID x 42″ ALUMINUM
11-0102
4″ ID x 42″ ALUMINUM
11-0105

® Hi-Vac Corporation. All Rights Reserved 09/2026 04439

117 Industry Road, Marietta, Ohio 45750, USA
US: 800.752.2400 | INT'L: +1.740.374.2306 | sales@hi-vac.com
www.hi-vacproducts.com | Hi-Vac Corporation | Hi-Vac Industrial Vacuum Systems

1-1/2" & 2" NOZZLES

These nozzles are designed for use with smaller Hi-Vac units such as Models 220, 225, 230, 310 and 320. They can be used with larger units only if more than one hose is used or the Hi-Vac is provided with sufficient bypass airflow.

16" WIDE WHEELED FLOOR NOZZLE	1 1/2" HOSE ID	2" HOSE ID
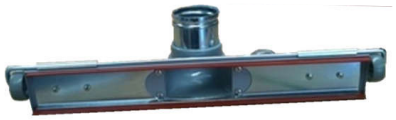	11-0057-02	11-0059-02
	Dual Squeegee Floor Nozzle for 1-1/2" Wand below.	Dual Squeegee Floor Nozzle for 2" Wand below.
	11-0057-01	11-0059-01
	1-1/2" Quick Release Double Curve Wand.	2" Quick Release Double Curve Wand.

NYLON BRISTLE FLOOR NOZZLE	1 1/2" HOSE ID	2" HOSE ID
(Requires handle from below.)	11-0065	11-0007
	14" Wide Replacement Bristles (TBA)	22" Wide Replacement Bristles (08-0361)
ALUMINUM DOUBLE CURVED HANDLE	11-0066	11-0008
	For use with 11-065 Only.	For use with 11-0007 Only.
54" ALUMINUM STRAIGHT HANDLE	11-0458	N/A
	For use with 11-0065 Only.	--

® Hi-Vac Corporation. All Rights Reserved 09/2026 04439

1-1/2" & 2" NOZZLES CONTINUED

THREADED ATTACHMENTS	1 1/2" HOSE ID	2" HOSE ID
CURVED ALUMINUM WAND	11-2286	11-2278
	60" Long, 40mm OD (Fits 1 1/2" ID Hose)	54" Long, 50mm OD (Fits 2" ID Hose)
STRAIGHT ALUMINUM EXTENSION	11-2287	11-2279
	54" Long Extension for 11-2286 40mm Wand	55" Long Extension for 11-2278 50mm Wand
4" ROUND BRUSH	11-2284	11-2276
	Threads onto above 11-2286 40mm Wand	Threads onto above 11-2278 50mm Wand
10" WALL BRUSH	11-2291	11-2277
	Threads onto above 11-2286 40mm Wand	Threads onto above 11-2278 50mm Wand
4" TO 6" PIPE CLEANING BRUSH	11-2292	11-2281
	Threads onto above 11-2286 40mm Wand	Threads onto above 11-2278 50mm Wand
6" TO 12" PIPE CLEANING BRUSH	11-2293	11-2283
	Threads onto above 11-2286 40mm Wand	Threads onto above 11-2278 50mm Wand

® Hi-Vac Corporation. All Rights Reserved 09/2026 04439

117 Industry Road, Marietta, Ohio 45750, USA
US: 800.752.2400 | INT'L: +1.740.374.2306 | sales@hi-vac.com
www.hi-vacproducts.com | Hi-Vac Corporation | Hi-Vac Industrial Vacuum Systems

1-1/2" (38MM) SLIP FIT ATTACHMENT

	1 1/2" x 12" L Aluminum Crevice Nozzle	11-0067
	1 1/2" x 36" L Bulk Pick-up Nozzle. 16Ga Aluminum	11-0070A

2" (50MM) SLIP FIT ATTACHMENTS & WANDS

	2" ID - 15" L Aluminum Crevice Nozzle	11-0009
	2" ID - Rubber Body 3" Round Brush	11-0304-1
	2" ID - 4" Pipe Cleaner Brush	11-0312-1
	2" ID - 8" Pipe Cleaner Brush	11-0313-1
	2" ID - 12" Pipe Cleaner Brush	11-0314-1
	2" ID - 12" Food Grade Wall Cleaner Brush	11-0308
	2" OD x 60" Smooth Aluminum Wand	11-0332
	2" OD x 120" Smooth Aluminum Wand	11-0329
	Compression Coupling for 2" OD Wands	11-0328

® Hi-Vac Corporation. All Rights Reserved 09/2026 04439

117 Industry Road, Marietta, Ohio 45750, USA
US: 800.752.2400 | INT'L: +1.740.374.2306 | sales@hi-vac.com
www.hi-vacproducts.com | Hi-Vac Corporation | Hi-Vac Industrial Vacuum Systems

TIP TOP RELIEF VALVE

(Cable operated vacuum relief safety valve)

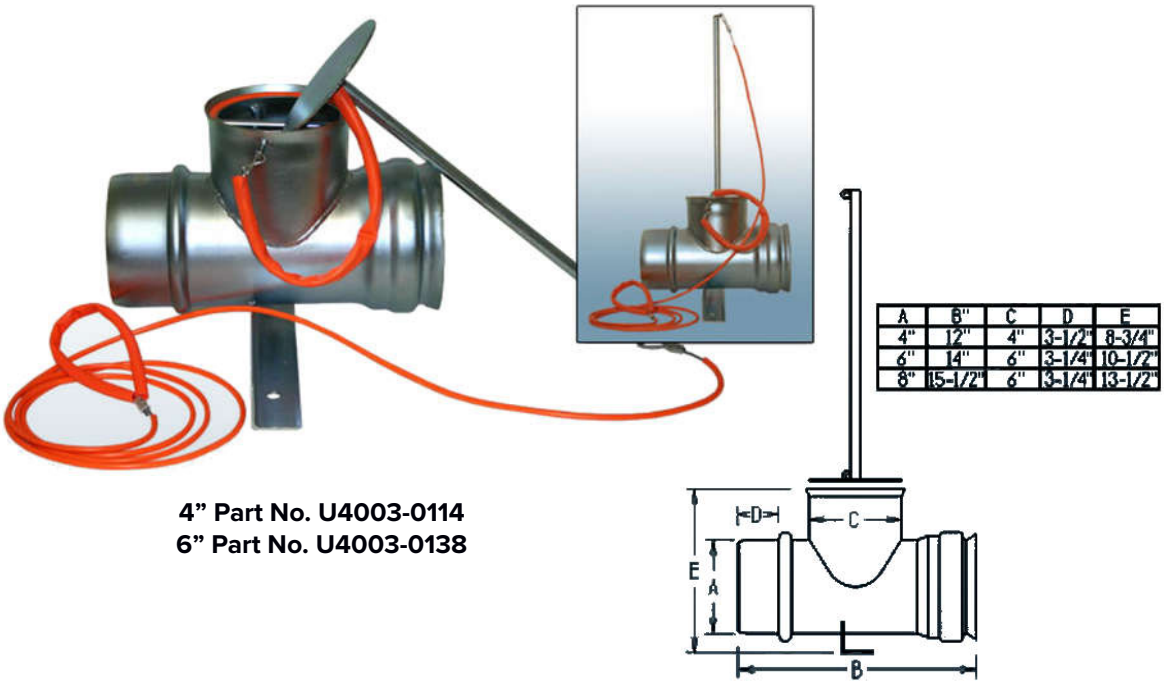

4" Part No. U4003-0114
6" Part No. U4003-0138

Used in conjunction with the following hose coupler components.

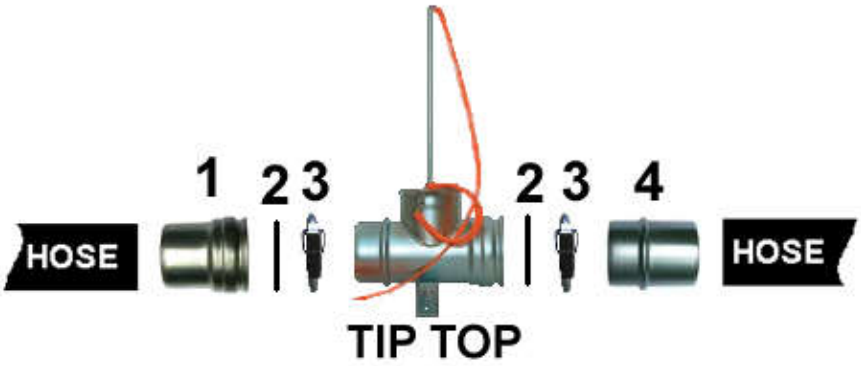

ITEM	DESCRIPTION	QTY	4" PART NUMBER	6" PART NUMBER
1	Female Hose Coupler	1	U4802-0047	U4802-0049
2	Coupler Gasket	2	U4805-0010	U4805-0012
3	Ring Lock Clamp	2	U484-0014	U4804-0016
4	Male Hose Coupler	1	U4802-0038	U4802-0040

® Hi-Vac Corporation. All Rights Reserved 09/2026 04439

117 Industry Road, Marietta, Ohio 45750, USA
US: 800.752.2400 | INT'L: +1.740.374.2306 | sales@hi-vac.com
www.hi-vacproducts.com | Hi-Vac Corporation | Hi-Vac Industrial Vacuum Systems

INLET VALVES & MALE COUPLINGS

(AKA Flap Valves and Flap Valve Inserts

STYLE 1

Threaded cast aluminum body and galvanized steel cover

STYLE 2

Threaded cast iron body and forged brass cover, all nickel plated.

STYLE 3

Carbon steel body and cover. Plain mounting end (attaches with compression coupling or butt weld).

SIZE	INLET VALVE			MALE COUPLING	
	PART NO.	MOUNTING END	STYLE	PART NO.	HOSE I.D.
2″	16-0419	2″ MNPT	1	02-3317	1.5″
	16-0302	2″ MNPT	1	02-3277	2″
2.5″	10-0688-2.5P	2.5″ Nom. Pipe	3	02-3574 02-3632	2″ 2.5″
	10-0688-2.5T	2.5″ OD Tube			
	16-0304	2.5″ MNPT	2	10-0565	2.5″
3″	10-0666-3P	3″ Nom. Pipe	3	02-3172	2.5″ 3″
	10-0666-3T	3″ OD Tube		02-3057	
	16-0612	3″ MNPT	2	10-0606	3″
3.5″	10-0691-3.5P	3.5″ Nom. Pipe	3	02-4615	3″ 3.5″
	10-0691-3.5T	3.5″ OD Tube		02-3531	
4″	10-0667-4P	4″ Nom. Pipe	3	02-3058	4″
	10-0667-4T	4″ OD Tube			
	16-0324	4″ MNPT	2	10-0635	4″

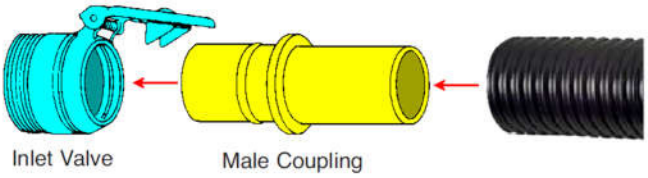

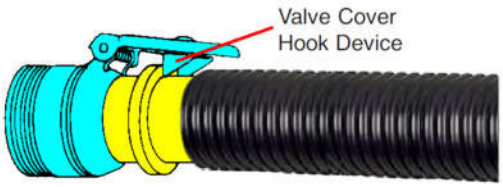

® Hi-Vac Corporation. All Rights Reserved 09/2026 04439

COMPRESSION COUPLINGS

FEATURES

Galvanized Steel
Neoprene Liner
8″ Length
4 Bolts

FOR PIPE

PART NO.	NOMINAL PIPE SIZE
10-0240	2″
10-0243	2.5″
10-0246	3″
10-0249	3.5″
10-0252	4″
10-0258	5″
10-0261	6″

FOR TUBING

PART NO.	TUBE OD
10-4034	2″
10-0613	2.5″
10-0573	3″
10-0528	3.5″
10-0524	4″
10-0523	5″
10-0522	6″

® Hi-Vac Corporation. All Rights Reserved 09/2026 04439

117 Industry Road, Marietta, Ohio 45750, USA
US: 800.752.2400 | INT'L: +1.740.374.2306 | sales@hi-vac.com
www.hi-vacproducts.com | Hi-Vac Corporation | Hi-Vac Industrial Vacuum Systems

PIPING COMPONENTS

When it comes to piping components, there are too many possible configurations to catalog them all here. To get a quote on these items, please supply the information needed below for each component needed.

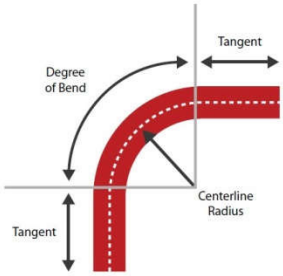

ELBOWS

- Tube OD or Nominal Pipe Size
- Tube Gauge or Pipe Schedule
- Tube or Pipe Material (CS*, Alum or Stainless)
- Degree of Bend
- Centerline Radius
- Threaded or Plain Ends (if pipe)
- Tangent Lengths (if crucial)

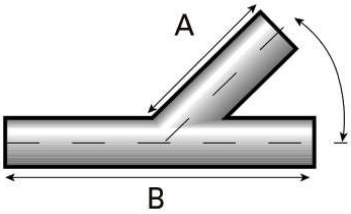

LATERALS

- Tube OD or Nominal Pipe Size of B (Trunk or Run)
- Tube OD or Nominal Pipe Size of A (Branch)
- Tube Gauge or Pipe Schedule
- Tube or Pipe Material (CS*, Alum or Stainless)
- Degree of Spread (typically 15° or 45°)
- Threaded or Plain Ends (if pipe)
- Length of A & B (if crucial)

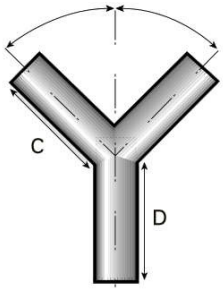

WYES (Y)

- Tube OD or Nominal Pipe Size of D (Trunk)
- Tube OD or Nominal Pipe Size of C (Branches)
- Tube Gauge or Pipe Schedule **
- Tube or Pipe Material (CS*, Alum or Stainless)
- Branch Angle (typically 15°, 30° or 45° from center)
- Threaded or Plain Ends (if pipe)
- Length of C & D (if crucial)

Though we do not commonly use these, TYs and YLs are also available.

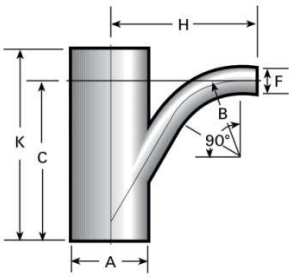

TY

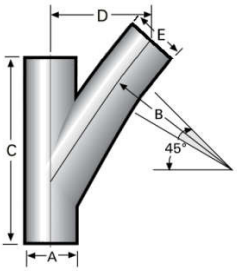

YL

* Carbon Steel
** 11ga is recommended for hose sleeve wyes.

® Hi-Vac Corporation. All Rights Reserved 09/2026 04439